COPYRIGHT 2017
SIGNALCORE, INC. ALL RIGHTS RESERVED.

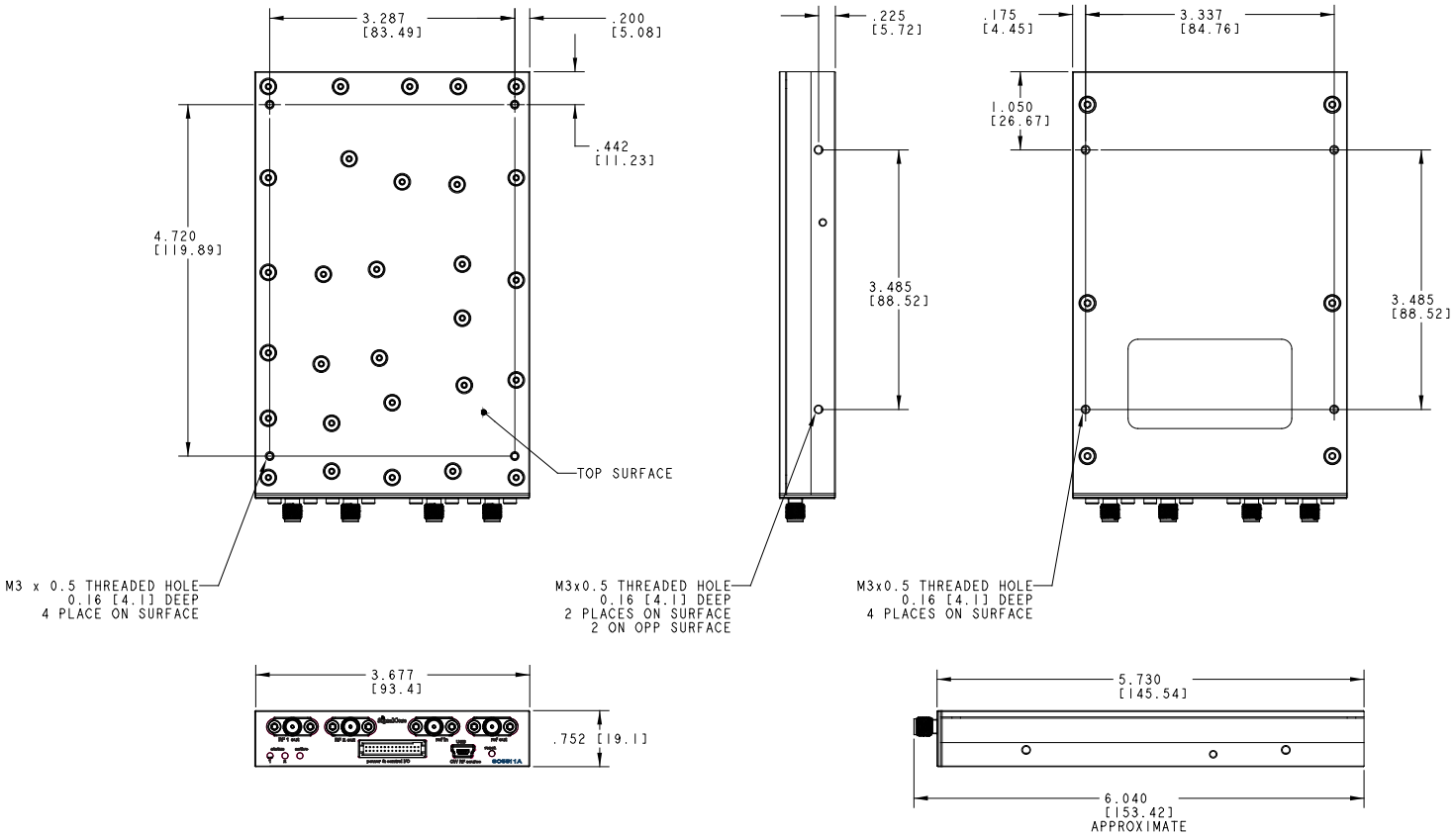

2 POWER AND CONTROL I/O CONNECTION IS A DUAL ROW, 30 POSITION SAMTEC TFM CONNECTOR, SAMTEC P/N TFM-115-01-L-D-RA. MATING CONNECTOR OPTIONS (AVAILABLE THROUGH SAMTEC AND CERTAIN ELECTRONIC COMPONENT DISTRIBUTORS) ARE:

1) DISCRETE WIRE DUAL ROW CRIMP HOUSINGS (SAMTEC SFSD OR SFSDT SERIES). SEE SAMTEC DATASHEETS FOR AVAILABLE OPTIONS.

1 DIRECT THERMAL ATTACHMENT TO THE TOP SURFACE OF THE RF MODULE IS THE PREFERRED MOUNTING METHOD.

NOTES: (UNLESS OTHERWISE SPECIFIED)

THIRD ANGLE PROJECTION

UNLESS OTHERWISE SPECIFIED
ALL DIMENSIONS SHOWN IN INCHES [MILLIMETERS]
TOLERANCES ARE:
.XX [0.X] ±.01 [0.25]
.XXX [0.XX] ±.005 [0.13]
ANGLES: ±2°
MATERIAL
FINISH

REVISION NOTES	DATE
1. INITIAL RELEASE.	

SignalCore Inc. AUSTIN, TEXAS

TITLE
PART DRAWING
SC5511X

SIZE	CAGE CODE NO.	DATE OF DRAWING	REV
C	6CG47	12/08/17	3

SCALE: 1/1 | DO NOT SCALE DRAWING | SHEET 1 OF 1